SH M06MW

Motorized TV Wall Mount

Fits most 32"-75" TVs

Experience smooth motion in an ultra-slim design

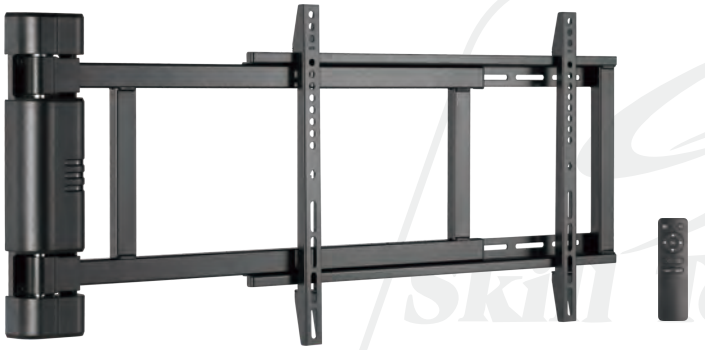

Dimensions (mm)

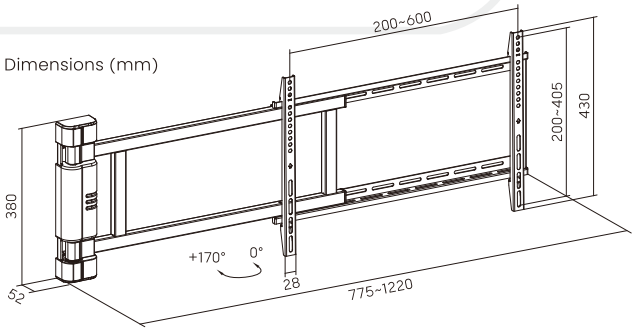

Screen Size
32" ~ 75"

VESA Compatible
Max.600x400

Profile to Wall
Min.56mm/2.2"

Weight Capacity
50kg/110lbs

Swivel Range
0° ~ +170°

Cable Management

Curved TV

Available for using existing
TV remote control to operate the functions.

Cable Management
keeps everything organized

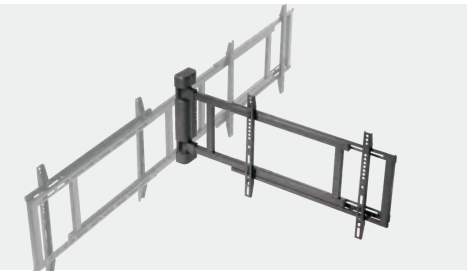

Collision Avoidance System
safeguards against accidents and injuries